Operational Amplifiers

- Active Circuit that amplifies Voltage
- COTS ; footprint · DIP
  SAC , TQFP

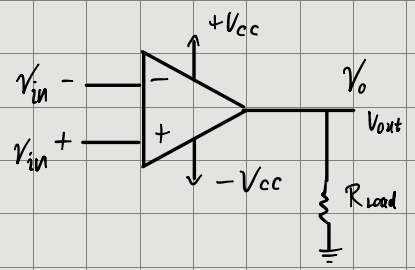

Equivalent Circuit

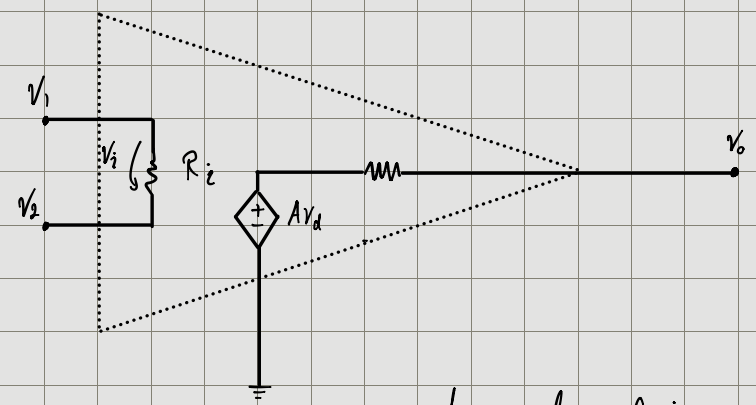

A open loop Gain

$v_d = v_2 - v_1$

$v_o = A(v_2 - v_1)$

Parameter	Ideal	Real
A	∞	$10^5 - 10^8 \Omega$
R_i	∞	$10^5 - 10^{13} \Omega$
R_o	0	$10 - 200 \Omega$
$\pm V_{cc}$		$\pm 1.5 - \pm 25V$

Open loop input-output Relationship

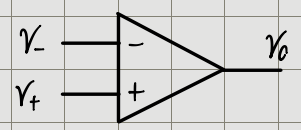

A Gain
10^6

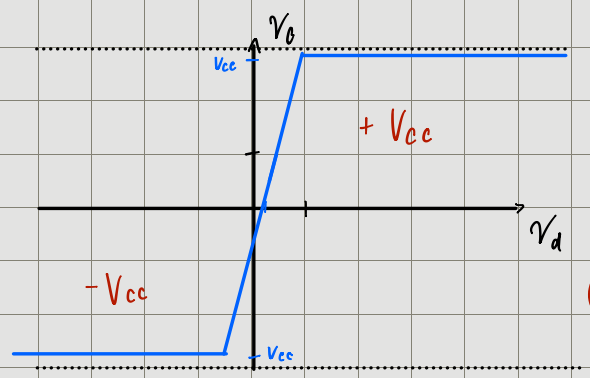

$(V_+ - V_-)$

$-1\mu V = 10^{-6}$

$-10^{-6} \times 10^6 = -1V$

Example 1 Comparator

Find V_o, if $A = 10^8$, $V_{cc} = 10V$ $-V_{cc} = -7V$, and V_2 are given below

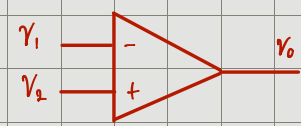

$v_d = v_2 - v_1$

$v_d = 2 - 1 = 1V$

$V_d = 0 - 2\mu = -2\mu V$

$A v_d = 2\mu \, 10^8 = -200$

V_-	V_+			
v_1	v_2	v_d	$A V_d$	v_o
1V	2V	1V	$10^8 V$	10V
$2\mu V$	0	-2μ	-200V	-7V
$2\mu V$	$1\mu V$			-7V
3V	0V			-7V
-3V	-1V			10V
0V	3V	\	\	10V
1V	-1V	\	\	-7V
-1V	1V	\	\	10V

Inverting Amplifiers

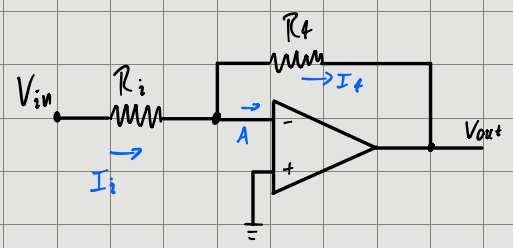

$$\begin{cases} V_{in^-} = V_{in^+} \\ I_- = I_+ = 0 \end{cases}$$

$$\frac{V_{out}}{V_{in}}$$

KCL on Node A:

$$I_i = I_f + I_-$$

$$V_A = 0$$

$$I_i = \frac{V_{in} - V_A}{R_i} = \frac{V_{in}}{R_i}$$

$$I_f = \frac{V_A - V_{out}}{R_f} = -\frac{V_{out}}{R_f}$$

$$\frac{V_{in}}{R_i} = \frac{-V_{out}}{R_f} \longrightarrow \boxed{\frac{V_{out}}{V_{in}} = -\frac{R_f}{R_{in}}}$$

Non-Inverting Amplifier

Find V_o/V_{in}

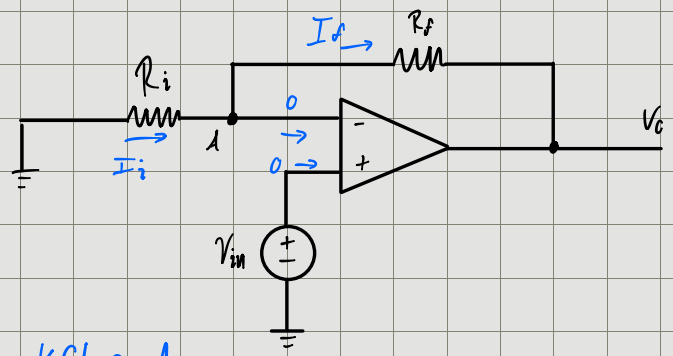

KCL on A:

$I_i = I_f$

$$I_i = \frac{-V_{in}}{R_i}$$

$$I_f = \frac{(V_{in}-V_o)}{R_f}$$

$$\frac{-V_{in}}{R_i} = \frac{V_{in}-V_o}{R_f}$$

$$\frac{V_o-V_{in}}{V_{in}} = \frac{R_f}{R_i}$$

$$\frac{V_o}{V_{in}} - 1 = \frac{R_f}{R_i}$$

$$\frac{V_o}{V_{in}} = 1 + \frac{R_f}{R_i}$$

Buffers

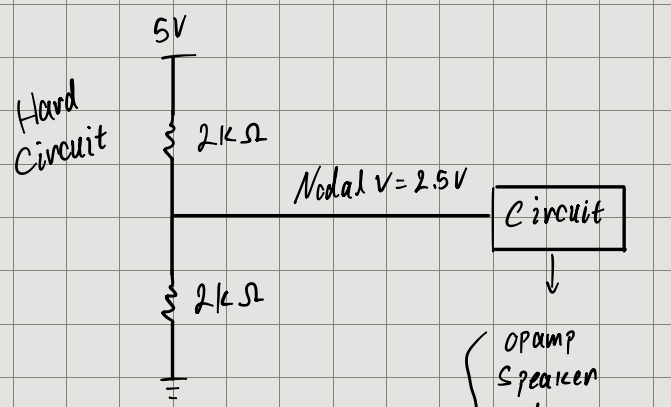

25mA
- opamp
- Speaker
- motor
- µC
- gate/flip flop
- LED + R

$$R_{eq} = \frac{2.5V}{25mA} = 100\Omega$$

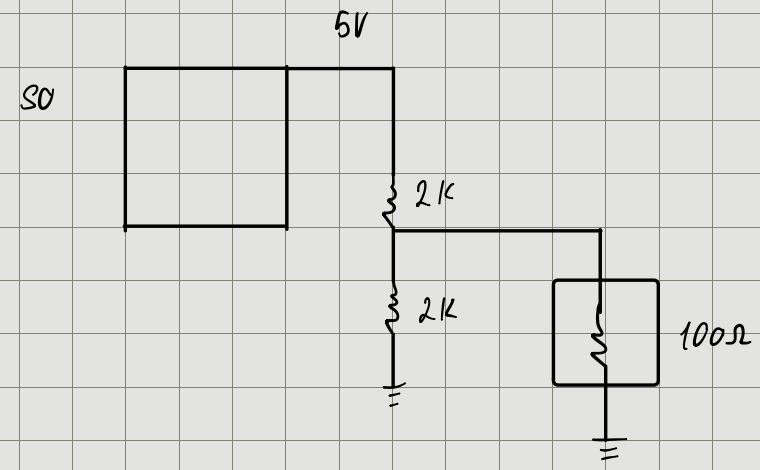

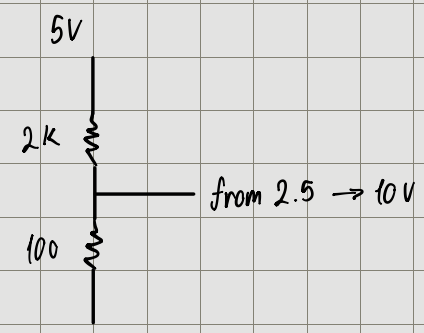

Fix

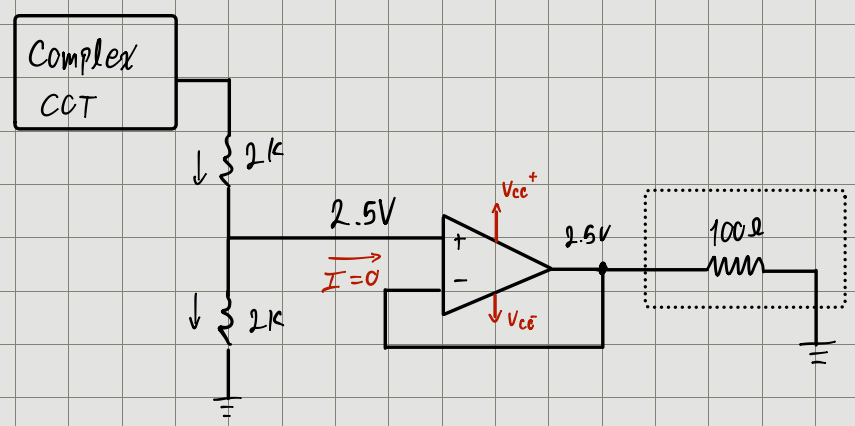

Summing Amplifier

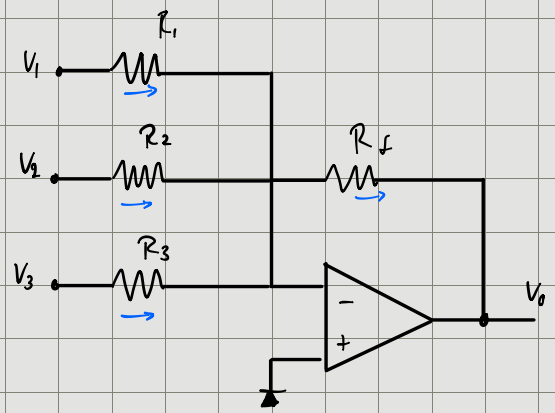

"find V_o/V_{in}"

Superposition: $V_o = V_{o1} + V_{o2} + V_{o3}$

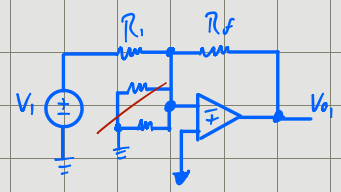

$$V_{o3} = -\frac{R_f}{R_3} V_3$$

$$V_o = -\frac{R_f}{R_1} V_1 - \frac{R_f}{R_2} V_2 - \frac{R_f}{R_3} V_3$$

Summing Amp:

$$V_o = -R_f \sum_{i=1}^{n} \frac{V_i}{R_i}$$

Difference Amplifier

$$V_0 = \frac{R_2}{R_1}(V_2 - V_1)$$

Q2:

$V_+ = 2V$

$V_- = 0V$

$\boxed{V_{out} = 5V}$

Q3 $V_- = 2\cos(2\pi 10t)$

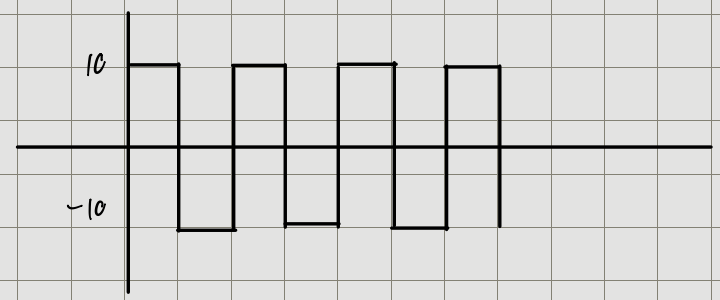

Q4:

$V_{out} = Gain \times V_{in} = 5 \times (-2V) = -10V$

Q5:

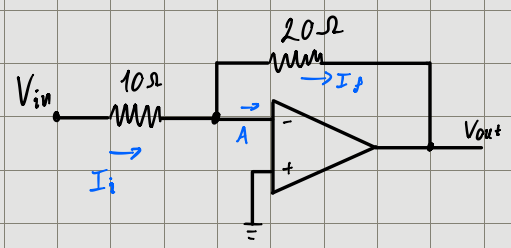

if $Gain = -\frac{R_f}{R_i}$

$R_f = 20\Omega$

$R_i = 10\Omega$

Q6 if $Gain = -\frac{R_f}{R_i} = \frac{V_{out}}{V_{in}}$

and $V_{out} = 4V$

$R_f = 40k\Omega$

$R_i = 5k\Omega$

What is V_{in}

$\Rightarrow -\frac{40k}{5k} = \frac{4}{V_{in}}$

$V_{in} = -\frac{4}{8} = -0.5V$

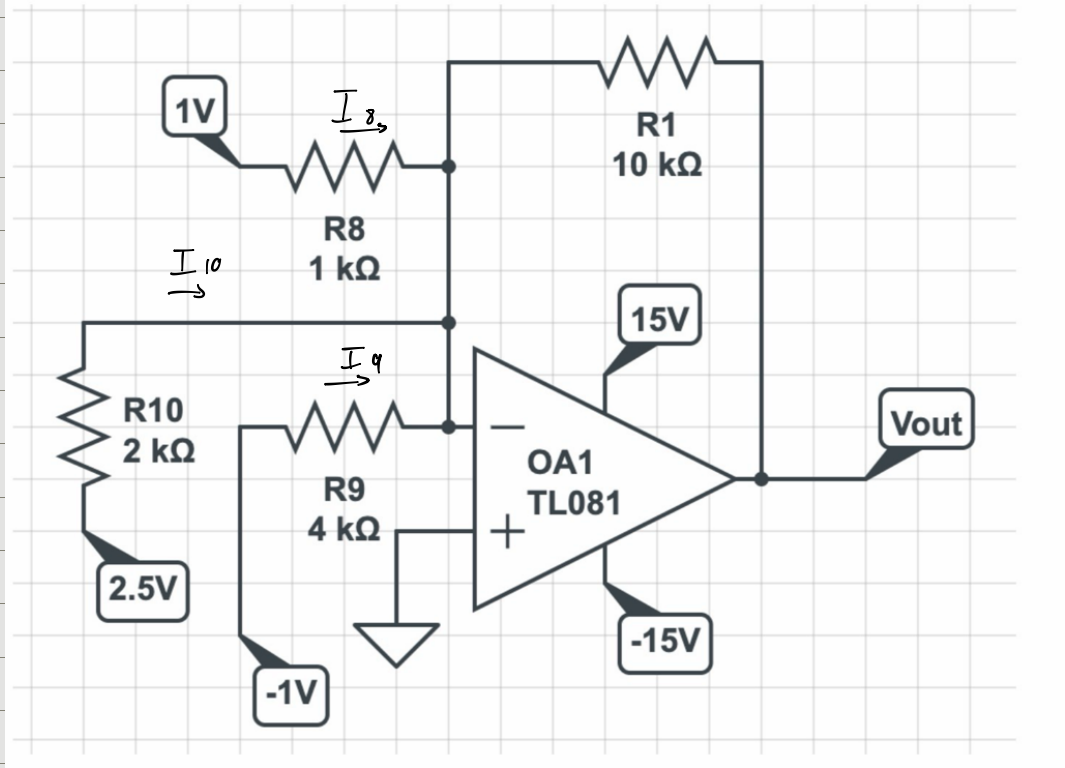

Q7 Summing Amplifier

$I_8 = \frac{1V}{1k\Omega} = 1mA$

$I_{10} = \frac{2.5V}{2k\Omega} = 1.25mA$

$I_9 = \frac{-1V}{4k} = -0.25mA$

$I_i = I_8 + I_{10} + I_9 = 2mA$

$V_o = -R_f I_i = -10k\Omega(2mA) = -20V$

Because of clipping, it would be $V_o = -15V$ instead